Graco EP Series

Peristaltic Hose Pump Technology

There are
NO EQUALS

Single, oversized roller compresses a low friction hose through a full 360-degrees of rotation

- More flow per revolution than conventional designs
- Inexpensive to maintain – no valves, seals or glands
- Pumps are reversible and can be used to empty lines or clear blockages
- Integral drive and motor can run as low as 1 rpm
- Extended hose life - only one hose compression per revolution

PROVEN QUALITY. LEADING TECHNOLOGY.

Springer Pumps, LLC
Telford, PA 18969

Tel: 866-777-6060 / Int'l: 215-949-2900
Fax: 866-777-6383 / Int'l: 215-721-1296

www.springerpumps.com
info@springerpumps.com

EP SERIES HOSE PUMPS

Unique Advantages

Graco's positive displacement hose pumps rotate a full 360-degrees.

Because they use a single roller to compress the hose once per revolution, your hoses last longer so you have less maintenance and downtime.

Several hose diameter options are available within the same housing. This gives you greater flexibility and means you can use your EP Series pump for a wide variety of applications.

EFFICIENT PUMPING ACTION

- One hose compression per revolution extends hose life

LOW MAINTENANCE

- Quick replacement of hose and tube
- No moving parts in the fluid stream

INTEGRAL DRIVE TRAIN

- Pump speeds as low as 1 rpm

REMOVABLE COVER

- Easier access to internal parts, making maintenance fast and simple

HOSE CLAMP ASSEMBLY

- One-piece "quick change" assembly for easy service

Springer Pumps, LLC
Telford, PA 18969
Tel: 866-777-6060 / Int'l: 215-949-2900
Fax: 866-777-6383 / Int'l: 215-721-1296
www.springerpumps.com
info@springerpumps.com

Built to Handle the Toughest Jobs

Only the interior of the hose is in contact with the fluid being pumped, making it easy to sterilize and clean the inside pumping surfaces. The gentle pumping action is ideal for shear sensitive materials and fragile cell cultures.

Innovative hose design

Graco's 360-degree hose pump is designed to put 40% less stress on the hose compared to conventional shoe pumps running at the same flow rate. The hoses are highly engineered for long life and durability and are available in a wide variety of configurations for the most demanding applications and materials.

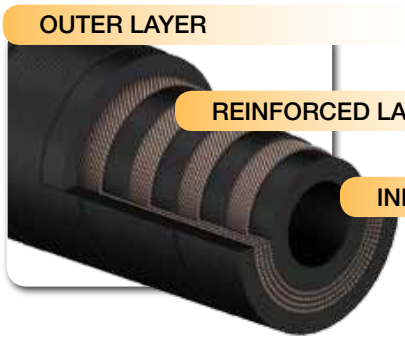

Choose from 8 different hose materials to meet your specific application requirements

EP Series Pumps

EP2

typically used for chemical metering applications

EP3

typically used for chemical metering or sanitary applications

EP4

typically used for abrasive material transfer applications

Hose Materials	Stripe Color / Inside Color	Max. Fluid Temperature
Natural Rubber (NR)	None / Black	160ºF (71ºC)
Nitrile Rubber (NBR)	Yellow / Black	220ºF (104ºC)
Nitrile Rubber, food grade (NBR food grade)	Yellow / White	220ºF (104ºC)
Ethylene propylene (EPDM)	Blue / Black	250ºF (121ºC)
Ethylene propylene, food grade (EPDM food grade)	Blue / White	250ºF (121ºC)
Neoprene (NEO)	Green / Black	220ºF (104ºC)
Ultra High Molecular Weight Polyethylene (UHMWPE)	White / Black	160ºF (71ºC)
Chlorosulfonated polyethylene (CSM)	Orange / Black	250ºF (121ºC)

Springer Pumps, LLC
Telford, PA 18969
Tel: 866-777-6060 / Int'l: 215-949-2900
Fax: 866-777-6383 / Int'l: 215-721-1296
www.springerpumps.com
info@springerpumps.com

How to Select Your Graco EP Series Pump

Three easy steps to choosing the right pump for YOU!

1. **Choose your pump size to meet your flow requirement**
   Refer to the Performance Charts below to choose your Pump Model.

2. **Choose your pump speed range**
   Using the Selection Charts, go to your Model Number and find the Gear Ratio for your desired pump speed.

3. **Choose your hose & hose barb materials to meet your material properties**
   Keep moving down the Selection Charts to select your hose material and your hose barb material.

STEP 1

Pump Model EP2006

Max flow (130 rpm): .....0.5 gpm (2.0 lpm)
Capacity: .....0.004 gal/rev (0.015 l/rev)
Max discharge pressure: .....200 psi (13.8 bar)
Hose diameter: ..... 6 mm
Port size: ..... 1/2 in male NPT

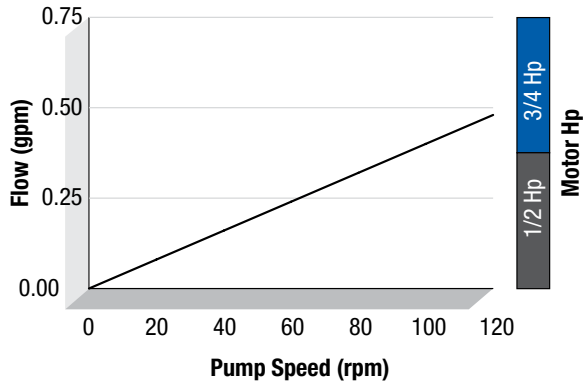

Pump Model EP2010

Max flow (130 rpm): .....1.2 gpm (4.4 lpm)
Capacity: .....0.009 gal/rev (0.034 l/rev)
Max discharge pressure: .....200 psi (13.8 bar)
Hose diameter: ..... 10 mm
Port size: ..... 1/2 in male NPT

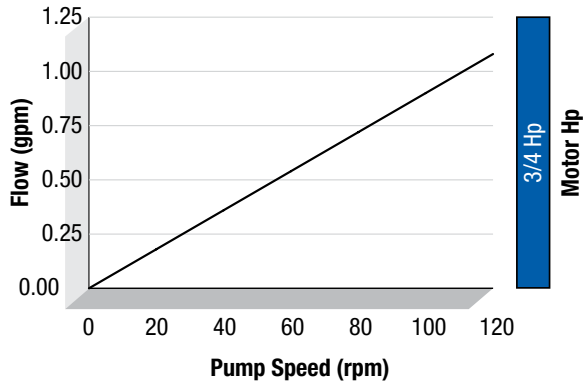

Pump Model EP2013

Max flow (130 rpm): .....2.1 gpm (7.9 lpm)
Capacity: .....0.016 gal/rev (0.06 l/rev)
Max discharge pressure: .....200 psi (13.8 bar)
Hose diameter: ..... 13 mm
Port size: ..... 1/2 in male NPT

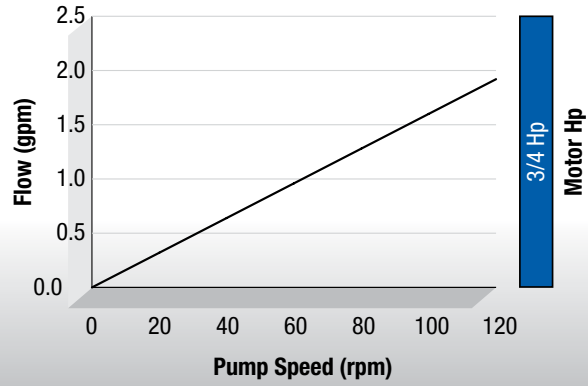

Springer Pumps, LLC
Telford, PA 18969
Tel: 866-777-6060 / Int'l: 215-949-2900
Fax: 866-777-6383 / Int'l: 215-721-1296
www.springerpumps.com
info@springerpumps.com

Pump Model EP3016

Max flow (130 rpm): .....4.6 gpm (17.2 lpm)
Capacity: .....0.035 gal/rev (0.132 l/rev)
Max discharge pressure: .....200 psi (13.8 bar)
Hose diameter: ..... 16 mm
Port size: .....3⁄4 in male NPT

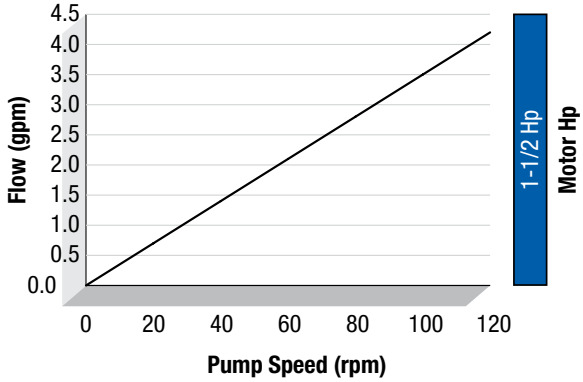

Pump Model EP3019

Max flow (130 rpm): .....6.2 gpm (23.6 lpm)
Capacity: .....0.048 gal/rev (0.182 l/rev)
Max discharge pressure: .....200 psi (13.8 bar)
Hose diameter: ..... 19 mm
Port size: .....3⁄4 in male NPT

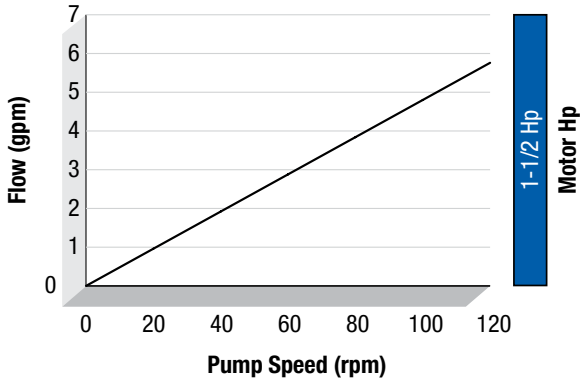

Pump Model EP4025

Max flow (130 rpm): .....14.3 gpm (54.1 lpm)
Capacity: .....0.11 gal/rev (0.416 l/rev)
Max discharge pressure: .....200 psi (13.8 bar)
Hose diameter: ..... 25 mm
Port size: ..... 1-1⁄4 in male NPT

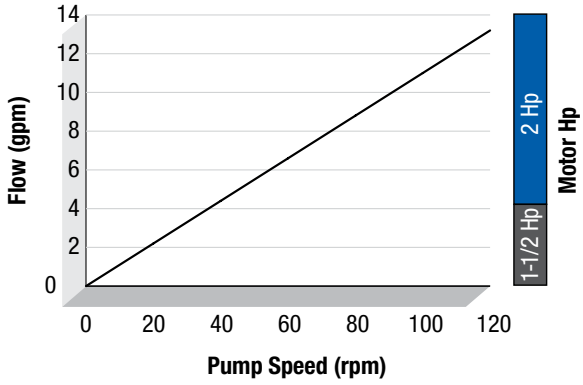

Pump Model EP4029

Max flow (130 rpm): .....19.5 gpm (73.8 lpm)
Capacity: .....0.15 gal/rev (0.568 l/rev)
Max discharge pressure: .....200 psi (13.8 bar)
Hose diameter: ..... 29 mm
Port size: ..... 1-1⁄4 in male NPT

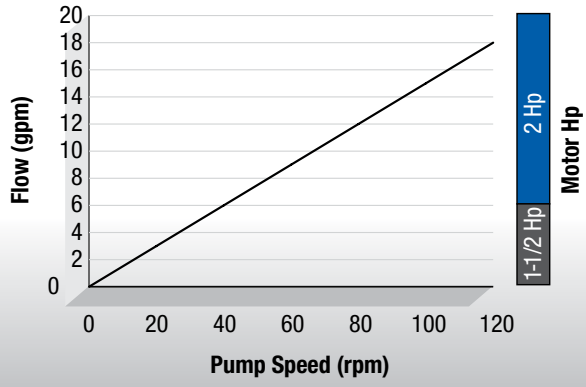

Springer Pumps, LLC
Telford, PA 18969
Tel: 866-777-6060 / Int'l: 215-949-2900
Fax: 866-777-6383 / Int'l: 215-721-1296
www.springerpumps.com
info@springerpumps.com

Graco Assembled Complete Pumps

(Fully assembled pumps include hose pump, motor/gearbox and glycerin lube)

STEP 2 Choose Your Pump Speed Range

Model	EP2006			EP2010			EP2013		
Max flow @ 130 rpm - gpm (lpm)	0.5 (2.0)			1.2 (4.4)			2.1 (7.9)		
Flow - gallon/rev (liter/rev)	0.004 (0.015)			0.009 (0.034)			0.016 (0.060)		
Pump Speed Range	Low	Mid	High	Low	Mid	High	Low	Mid	High
Pump Speed @ 60 Hz - rpm	11	35	90	11	51	90	11	51	90
Flow Rate @ 60 Hz - gpm (lpm)	0.046 (0.17)	0.14 (0.52)	0.36 (1.36)	0.10 (0.37)	0.46 (1.74)	0.81 (3.06)	0.17 (0.64)	0.82 (3.1)	1.4 (5.2)
Maximum Working Pressure	200 psi (13.8 bar)			200 psi (13.8 bar)			200 psi (13.8 bar)		
Maximum Suction Lift - ft (m)	29 (8.9)			29 (8.9)			29 (8.9)		
Operation Manual	3A1938			3A1938			3A1938		
Repair Parts Manual	3A1940			3A1940			3A1940		
Pump Inlet / Outlet Size	1/2 inch male NPT			1/2 inch male NPT			1/2 inch male NPT		

STEP 3 Choose Your Hose & Hose Barb Materials

Hose Material	Hose Barb Material	EP2006			EP2010			EP2013		
Natural Rubber	316 SST	24L104	24L118	24L132	24L146	24L160	24L174	24L188	24L202	24L216
	Hastelloy-C									
Nitrile	316 SST	24L107	24L121	24L135	24L149	24L163	24L177	24L191	24L205	24L219
	Hastelloy-C	24L108	24L122	24L136	24L150	24L164	24L178	24L192	24L206	24L220
Nitrile Food Grade	316 SST	24L109	24L123	24L137	24L151	24L165	24L179	24L193	24L207	24L221
	Hastelloy-C	24L110	24L124	24L138	24L152	24L166	24L180	24L194	24L208	24L222
EPDM	316 SST	24L100	24L114	24L128	24L142	24L156	24L170	24L184	24L198	24L212
	Hastelloy-C	24L101	24L115	24L129	24L143	24L157	24L171	24L185	24L199	24L213
EPDM Food Grade	316 SST	24L102	24L116	24L130	24L144	24L158	24L172	24L186	24L200	24L214
	Hastelloy-C	24L103	24L117	24L131	24L145	24L159	24L173	24L187	24L201	24L215
Neoprene	316 SST	24L111	24L125	24L139	24L153	24L167	24L181	24L195	24L209	24L223
	Hastelloy-C									
CSM	316 SST	24L105	24L119	24L133	24L147	24L161	24L175	24L189	24L203	24L217
	Hastelloy-C	24L106	24L120	24L134	24L148	24L162	24L176	24L190	24L204	24L218
UHMW PE	316 SST	24L112	24L126	24L140	24L154	24L168	24L182	24L196	24L210	24L224
	Hastelloy-C	24L113	24L127	24L141	24L155	24L169	24L183	24L197	24L211	24L225

Springer Pumps, LLC
Telford, PA 18969
Tel: 866-777-6060 / Int'l: 215-949-2900
Fax: 866-777-6383 / Int'l: 215-721-1296
www.springerpumps.com
info@springerpumps.com

Graco Assembled Complete Pumps

(Fully assembled pumps include hose pump, motor/gearbox and glycerin lube)

Choose Your Pump Speed Range

Model	EP3016			EP3019			EP4025			EP4029		
Max flow @ 130 rpm - gpm (lpm)	4.6 (17.2)			6.2 (23.6)			14.3 (54.1)			19.5 (73.8)		
Flow - gallon/rev (liter/rev)	0.035 (0.132)			0.048 (0.182)			0.11 (0.416)			0.15 (0.568)		
Pump Speed Range	Low	Mid	High	Low	Mid	High	Low	Mid	High	Low	Mid	High
Pump Speed @ 60 Hz - rpm	18	50	87	18	50	87	23	52	91	23	52	91
Flow Rate @ 60 Hz - gpm (lpm)	0.63 (2.4)	1.8 (6.8)	3.1 (11.7)	0.86 (3.2)	2.4 (9.0)	4.2 (15.8)	2.5 (9.4)	5.8 (21.9)	10.1 (38.2)	3.4 (12.8)	7.9 (29.9)	13.7 (51.8)
Maximum Working Pressure	200 psi (13.8 bar)			200 psi (13.8 bar)			200 psi (13.8 bar)			200 psi (13.8 bar)		
Maximum Suction Lift - ft (m)	29 (8.9)			29 (8.9)			29 (8.9)			29 (8.9)		
Operation Manual	3A1938			3A1938			3A1938			3A1938		
Repair Parts Manual	3A1939			3A1939			3A1939			3A1939		
Pump Inlet / Outlet Size	3/4 inch male NPT			3/4 inch male NPT			1-1/4 inch male NPT			1-1/4 inch male NPT		

Choose Your Hose & Hose Barb Materials

Hose Material	Hose Barb Material	EP3016			EP3019			EP4025			EP4029		
Natural Rubber	316 SST	24L504	24L518	24L532	24L546	24L560	24L574	25L002	25L010	25L018	25L028	25L042	25L056
	Hastelloy-C												
Nitrile	316 SST	24L507	24L521	24L535	24L549	24L563	24L577	25L004	25L012	25L020	25L031	25L045	25L059
	Hastelloy-C	24L508	24L522	24L536	24L550	24L564	24L578				25L032	25L046	25L060
Nitrile Food Grade	316 SST	24L509	24L523	24L537	24L551	24L565	24L579	25L005	25L013	25L021	25L033	25L047	25L061
	Hastelloy-C	24L510	24L524	24L538	24L552	24L566	24L580				25L034	25L048	25L062
EPDM	316 SST	24L500	24L514	24L528	24L542	24L556	24L570	25L000	25L008	25L016	25L024	25L038	25L052
	Hastelloy-C	24L501	24L515	24L529	24L543	24L557	24L571				25L025	25L039	25L053
EPDM Food Grade	316 SST	24L502	24L516	24L530	24L544	24L558	24L572	25L001	25L009	25L017	25L026	25L040	25L054
	Hastelloy-C	24L503	24L517	24L531	24L545	24L559	24L573				25L027	25L041	25L055
Neoprene	316 SST	24L511	24L525	24L539	24L553	24L567	24L581	25L006	25L014	25L022	25L035	25L049	25L063
	Hastelloy-C												
CSM	316 SST	24L505	24L519	24L533	24L547	24L561	24L575	25L003	25L011	25L019	25L029	25L043	25L057
	Hastelloy-C	24L506	24L520	24L534	24L548	24L562	24L576				25L030	25L044	25L058
UHMW PE	316 SST	24L512	24L526	24L540	24L554	24L568	24L582	25L007	25L015	25L023	25L036	25L050	25L064
	Hastelloy-C	24L513	24L527	24L541	24L555	24L569	24L583				25L037	25L051	25L065

Springer Pumps, LLC
Telford, PA 18969
Tel: 866-777-6060 / Int'l: 215-949-2900
Fax: 866-777-6383 / Int'l: 215-721-1296
www.springerpumps.com
info@springerpumps.com

Graco Pump Kits with hose not installed

(Fully assembled pumps and glycerin lube with the hose shipped in a separate package)

STEP 2 Choose Your Pump Speed Range

Model	EP2006			EP2010			EP2013		
Max flow @ 130 rpm - gpm (lpm)	0.5 (2.0)			1.2 (4.4)			2.1 (7.9)		
Flow - gallon/rev (liter/rev)	0.004 (0.015)			0.009 (0.034)			0.016 (0.060)		
Pump Speed Range	Low	Mid	High	Low	Mid	High	Low	Mid	High
Pump Speed @ 60 Hz - rpm	11	35	90	11	51	90	11	51	90
Flow Rate @ 60 Hz - gpm (lpm)	0.046 (0.17)	0.14 (0.52)	0.36 (1.36)	0.10 (0.37)	0.46 (1.74)	0.81 (3.06)	0.17 (0.64)	0.82 (3.1)	1.4 (5.2)
Maximum Working Pressure	200 psi (13.8 bar)			200 psi (13.8 bar)			200 psi (13.8 bar)		
Maximum Suction Lift - ft (m)	29 (8.9)			29 (8.9)			29 (8.9)		
Operation Manual	3A1938			3A1938			3A1938		
Repair Parts Manual	3A1940			3A1940			3A1940		
Pump Inlet / Outlet Size	1/2 inch male NPT			1/2 inch male NPT			1/2 inch male NPT		

STEP 3 Choose Your Hose & Hose Barb Materials

Hose Material	Hose Barb Material	EP2006			EP2010			EP2013		
Natural Rubber	316 SST	24L374	24L388	24L402	24L416	24L430	24L444	24L458	24L472	24L486
	Hastelloy-C									
Nitrile	316 SST	24L377	24L391	24L405	24L419	24L433	24L447	24L461	24L475	24L489
	Hastelloy-C	24L378	24L392	24L406	24L420	24L434	24L448	24L462	24L476	24L490
Nitrile Food Grade	316 SST	24L379	24L393	24L407	24L421	24L435	24L449	24L463	24L477	24L491
	Hastelloy-C	24L380	24L394	24L408	24L422	24L436	24L450	24L464	24L478	24L492
EPDM	316 SST	24L370	24L384	24L398	24L412	24L426	24L440	24L454	24L468	24L482
	Hastelloy-C	24L371	24L385	24L399	24L413	24L427	24L441	24L455	24L469	24L483
EPDM Food Grade	316 SST	24L372	24L386	24L400	24L414	24L428	24L442	24L456	24L470	24L484
	Hastelloy-C	24L373	24L387	24L401	24L415	24L429	24L443	24L457	24L471	24L485
Neoprene	316 SST	24L381	24L395	24L409	24L423	24L437	24L451	24L465	24L479	24L493
	Hastelloy-C									
CSM	316 SST	24L375	24L389	24L403	24L417	24L431	24L445	24L459	24L473	24L487
	Hastelloy-C	24L376	24L390	24L404	24L418	24L432	24L446	24L460	24L474	24L488
UHMW PE	316 SST	24L382	24L396	24L410	24L424	24L438	24L452	24L466	24L480	24L494
	Hastelloy-C	24L383	24L397	24L411	24L425	24L439	24L453	24L467	24L481	24L495

Springer Pumps, LLC
Telford, PA 18969
Tel: 866-777-6060 / Int'l: 215-949-2900
Fax: 866-777-6383 / Int'l: 215-721-1296
www.springerpumps.com
info@springerpumps.com

Graco Pump Kits with hose not installed

(Fully assembled pumps and glycerin lube with the hose shipped in a separate package)

Choose Your Pump Speed Range

Model	EP3016			EP3019			EP4025			EP4029		
Max flow @ 130 rpm - gpm (lpm)	4.6 (17.2)			6.2 (23.6)			14.3 (54.1)			19.5 (73.8)		
Flow - gallon/rev (liter/rev)	0.035 (0.132)			0.048 (0.182)			0.11 (0.416)			0.15 (0.568)		
Pump Speed Range	Low	Mid	High	Low	Mid	High	Low	Mid	High	Low	Mid	High
Pump Speed @ 60 Hz - rpm	18	50	87	18	50	87	23	52	91	23	52	91
Flow Rate @ 60 Hz - gpm (lpm)	0.63 (2.4)	1.8 (6.8)	3.1 (11.7)	0.86 (3.2)	2.4 (9.0)	4.2 (15.8)	2.5 (9.4)	5.8 (21.9)	10.1 (38.2)	3.4 (12.8)	7.9 (29.9)	13.7 (51.8)
Maximum Working Pressure	200 psi (13.8 bar)			200 psi (13.8 bar)			200 psi (13.8 bar)			200 psi (13.8 bar)		
Maximum Suction Lift - ft (m)	29 (8.9)			29 (8.9)			29 (8.9)			29 (8.9)		
Operation Manual	3A1938			3A1938			3A1938			3A1938		
Repair Parts Manual	3A1939			3A1939			3A1939			3A1939		
Pump Inlet / Outlet Size	3/4 inch male NPT			3/4 inch male NPT			1-1/4 inch male NPT			1-1/4 inch male NPT		

Choose Your Hose & Hose Barb Materials

Hose Material	Hose Barb Material	EP3016			EP3019			EP4025			EP4029		
Natural Rubber	316 SST	24L588	24L602	24L616	24L630	24L644	24L658	25L068	25L076	25L084	25L094	25L108	25L122
	Hastelloy-C												
Nitrile	316 SST	24L591	24L605	24L619	24L633	24L647	24L661	25L070	25L078	25L086	25L097	25L111	25L125
	Hastelloy-C	24L592	24L606	24L620	24L634	24L648	24L662				25L098	25L112	25L126
Nitrile Food Grade	316 SST	24L593	24L607	24L621	24L635	24L649	24L663	25L071	25L079	25L087	25L099	25L113	25L127
	Hastelloy-C	24L594	24L608	24L622	24L636	24L650	24L664				25L100	25L114	25L128
EPDM	316 SST	24L584	24L598	24L612	24L626	24L640	24L654	25L066	25L074	25L082	25L090	25L104	25L118
	Hastelloy-C	24L585	24L599	24L613	24L627	24L641	24L655				25L091	25L105	25L119
EPDM Food Grade	316 SST	24L586	24L600	24L614	24L628	24L642	24L656	25L067	25L075	25L083	25L092	25L106	25L120
	Hastelloy-C	24L587	24L601	24L615	24L629	24L643	24L657				25L093	25L107	25L121
Neoprene	316 SST	24L595	24L609	24L623	24L637	24L651	24L665	25L072	25L080	25L088	25L101	25L115	25L129
	Hastelloy-C												
CSM	316 SST	24L589	24L603	24L617	24L631	24L645	24L659	25L069	25L077	25L085	25L095	25L109	25L123
	Hastelloy-C	24L590	24L604	24L618	24L632	24L646	24L660				25L096	25L110	25L124
UHMW PE	316 SST	24L596	24L610	24L624	24L638	24L652	24L666	25L073	25L081	25L089	25L102	25L116	25L130
	Hastelloy-C	24L597	24L611	24L625	24L639	24L653	24L667				25L103	25L117	25L131

Springer Pumps, LLC
Telford, PA 18969
Tel: 866-777-6060 / Int'l: 215-949-2900
Fax: 866-777-6383 / Int'l: 215-721-1296
www.springerpumps.com
info@springerpumps.com

Hose Pumps with No Motor Drive

(Fully assembled pumps with customer supplied motor drive)

Hose Material	Hose Barb Material	EP2006	EP2010	EP2013	EP3016	EP3019	EP4025	EP4029
Natural Rubber	316 SST	24M739	24M753	24M767	24M781	24M795	24M810	24M820
	Hastelloy-C							
Nitrile	316 SST	24M742	24M756	24M770	24M784	24M798	24M812	24M823
	Hastelloy-C	24M743	24M757	24M771	24M785	24M799		24M824
Nitrile Food Grade	316 SST	24M744	24M758	24M772	24M786	24M800	24M813	24M825
	Hastelloy-C	24M745	24M759	24M773	24M787	24M801		24M826
EPDM	316 SST	24M735	24M749	24M763	24M777	24M791	24M808	24M816
	Hastelloy-C	24M736	24M750	24M764	24M778	24M792		24M817
EPDM Food Grade	316 SST	24M737	24M751	24M765	24M779	24M793	24M809	24M818
	Hastelloy-C	24M738	24M752	24M766	24M780	24M794		24M819
Neoprene	316 SST	24M746	24M760	24M774	24M788	24M802	24M814	24M827
	Hastelloy-C							
CSM	316 SST	24M740	24M754	24M768	24M782	24M796	24M811	24M821
	Hastelloy-C	24M741	24M755	24M769	24M783	24M797		24M822
UHMW PE	316 SST	24M747	24M761	24M775	24M789	24M803	24M815	24M828
	Hastelloy-C	24M748	24M762	24M776	24M790	24M804		24M829

Mounting a Non-Graco Motor

To mount a non-Graco motor and gearbox to a bare EP Hose Pump

EP Series Pump Size	Hollow Bore Shaft Diameter A	Bolt Circle Diameter B	Flange Pilot Diameter C	Mounting Hole Thread Size D
EP2	20 mm	100 mm	80 mm	M6
EP3	30 mm	130 mm	110 mm	M8
EP4	35 mm	165 mm	130 mm	M10

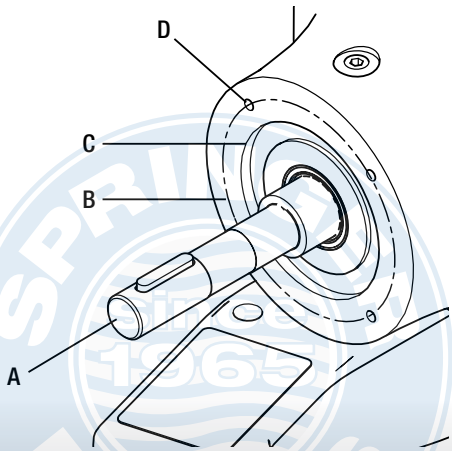

Motor mounting dimensions for EP2 Pumps

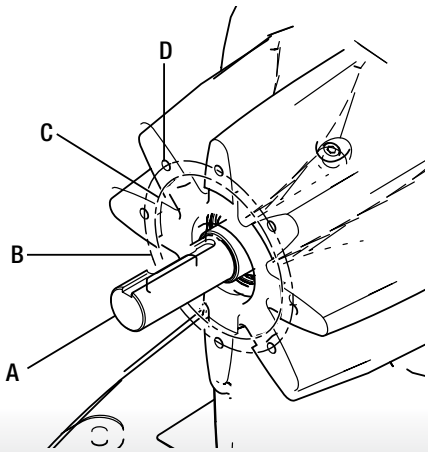

Motor mounting dimensions for EP3 & EP4 Pumps

Springer Pumps, LLC
Telford, PA 18969
Tel: 866-777-6060 / Int'l: 215-949-2900
Fax: 866-777-6383 / Int'l: 215-721-1296
www.springerpumps.com
info@springerpumps.com

Kits and Replacement Hoses Ordering Information

Replacement Hose Kits*

	EP2006	EP2010	EP2013	EP3016	EP3019	EP4025	EP4029
Natural Rubber	24K482	24K492	24K502	24K522	24K532	24K542	24K552
Nitrile	24K484	24K494	24K504	24K524	24K534	24K544	24K554
Nitrile Food Grade	24K486	24K496	24K506	24K526	24K536	24K546	24K556
EPDM	24K483	24K493	24K503	24K523	24K533	24K543	24K553
EPDM Food Grade	24K485	24K495	24K505	24K525	24K535	24K545	24K555
Neoprene	24K489	24K499	24K509	24K529	24K539	24K549	24K559
UHMW PE	24K488	24K498	24K508	24K528	24K538	24K548	24K558
CSM	24K487	24K497	24K507	24K527	24K537	24K547	24K557

*Includes 2 clamps

VFDs (Variable Frequency Drives)

Hp	Input Voltage	Output Voltage	Used with Pump	Part Number
0.5	120 or 240 VAC (1 Phase)	240 VAC (3 Phase)	EP2006	16K905
0.5	208-240 VAC (1 or 3 Phase)	208-240 VAC (3 Phase)	EP2006	16K906
1	120 or 240 VAC (1 Phase)	240 VAC (3 Phase)	EP2010, EP2013	16K907
1	208-240 VAC (1 or 3 Phase)	208-240 VAC (3 Phase)	EP2010, EP2013	16K908
1.5	120 or 240 VAC (1 Phase)	240 VAC (3 Phase)	EP3016, EP3019	16K909
1.5	208-240 VAC (1 or 3 Phase)	208-240 VAC (3 Phase)	EP3016, EP3019	16K910
2	208-240 VAC (1 or 3 Phase)	208-240 VAC (3 Phase)	EP4025, EP4029	16K911
2	400-480 VAC (3 Phase)	400-480 VAC (3 Phase)	EP4025, EP4029	16K912

Hose Pump Lubricant

Description	Part Number
Glycerin Based Hose Lube (1 quart)	24K692
Glycerin Based Hose Lube (1 gallon)	24K694
Glycerin Based Hose Lube (55 gallon drum)	24M435
Silicone Based Hose Lube (1 gallon)	24K686
Silicone Based Hose Lube (55 gallon drum)	24M434

EP2 requires 8 oz (250 mL) of hose lube; EP3 requires 1 qt (1 l) of hose lube; EP4 requires 1/2 gallon (2 l) of hose lube
Factory fill is glycerin, shipped in a separate bottle

Other

Description	Part Number
"Band-It" Clamp Tool	24L497

Springer Pumps, LLC
Telford, PA 18969
Tel: 866-777-6060 / Int'l: 215-949-2900
Fax: 866-777-6383 / Int'l: 215-721-1296
www.springerpumps.com
info@springerpumps.com

Graco Process Solutions

EP2 Hose Pump

- Max flow: 2.1 gpm (7.9 lpm)
- Ideal for chemical metering applications

EP3 Hose Pump

- Max flow: 6.2 gpm (23.6 lpm)
- Typically used for chemical metering & sanitary applications

EP4 Hose Pump

- Max flow: 19.5 gpm (73.8 lpm)
- Ideal for abrasive material transfer applications

Husky™ 205

- 1/4 in (6.3 mm) connection
- Max flow: 5 gpm (19 lpm)
- Polypropylene, acetal, PVDF

Husky 307

- 3/8 in (9.4 mm) connection
- Max flow: 7 gpm (26 lpm)
- Polypropylene, acetal

Husky 515

- 1/2 in (12.7 mm) connection
- Max flow: 15 gpm (57 lpm)
- Polypropylene, acetal, PVDF

Husky 716

- 3/4 in (19.1 mm) connection
- Max flow: 16 gpm (61 lpm)
- Aluminum, stainless steel

Husky 1050

- 1 in (25.4 mm) connection
- Max flow: 50 gpm (189 lpm)
- Aluminum, polypropylene, conductive polypropylene, PVDF, stainless steel, hastelloy

Husky 1590

- 1-1/2 in (38.1 mm) connection
- Max flow: 90 gpm (340 lpm)
- Polypropylene, acetal, PVDF, aluminum, stainless steel

Husky 2150

- 2 in (50.8 mm) connection
- Max flow: 150 gpm (568 lpm)
- Polypropylene, PVDF, aluminum, stainless steel, iron

Husky 3300

- 3 in (76.2 mm) connection
- Max flow: 300 gpm (1135 lpm)
- Polypropylene, aluminum, stainless steel

1:1 Fast-Flo®

- Max flow: 5 gpm (19 lpm)
- UL options available

Priming Piston Ink Pump

- Enclosed, dual seal wet cup for longer seal life
- Runaway control with optional DataTrak™

Hydraulic Ink Pump

- Up to 3 times more efficient than pneumatic pumps
- Typical applications:
  - Letterpress inks
  - Lithographic inks

Hydra-Clean®

- High pressure cleaning and sanitizing
- Air-operated for hazardous or confined areas
- 12:1, 23:1, 30:1 or 45:1 ratio options
- Available in wall or cart mount packages

All written and visual data contained in this document are based on the latest product information available at the time of publication. Graco reserves the right to make changes at any time without notice.

Call today for product information or to request a demonstration.

877.84GRACO (1-877-844-7226) or visit us at www.graco.com.

©2012, 2011 Graco Inc. Form No. 344964 Rev. B 06/12 Printed in the U.S.A.
All other brand names or marks are used for identification purposes and are trademarks of their respective owners.

GRACO®

Springer Pumps, LLC
Telford, PA 18969

Tel: 866-777-6060 / Int'l: 215-949-2900
Fax: 866-777-6383 / Int'l: 215-721-1296

www.springerpumps.com
info@springerpumps.com